PARTS CATALOG

Model EY153

Spec. No. EY153DC0660

(For RED OCTOBER)

ISSUE EMD - GP7229	
ISSUE DATE	2011.07

CONTENTS

FIG.	
100	CRANK CASE
200	CRANK,PISTON
300, 310	INTAKE,EXHAUST
400	GOVERNOR,OPERATION
500, 520	COOLING,STARTING
600, 630, 640	FUEL LUBRICANT
700	ELECTRIC DEVICE
900	ACCESSORIES LABEL

FIG. 100

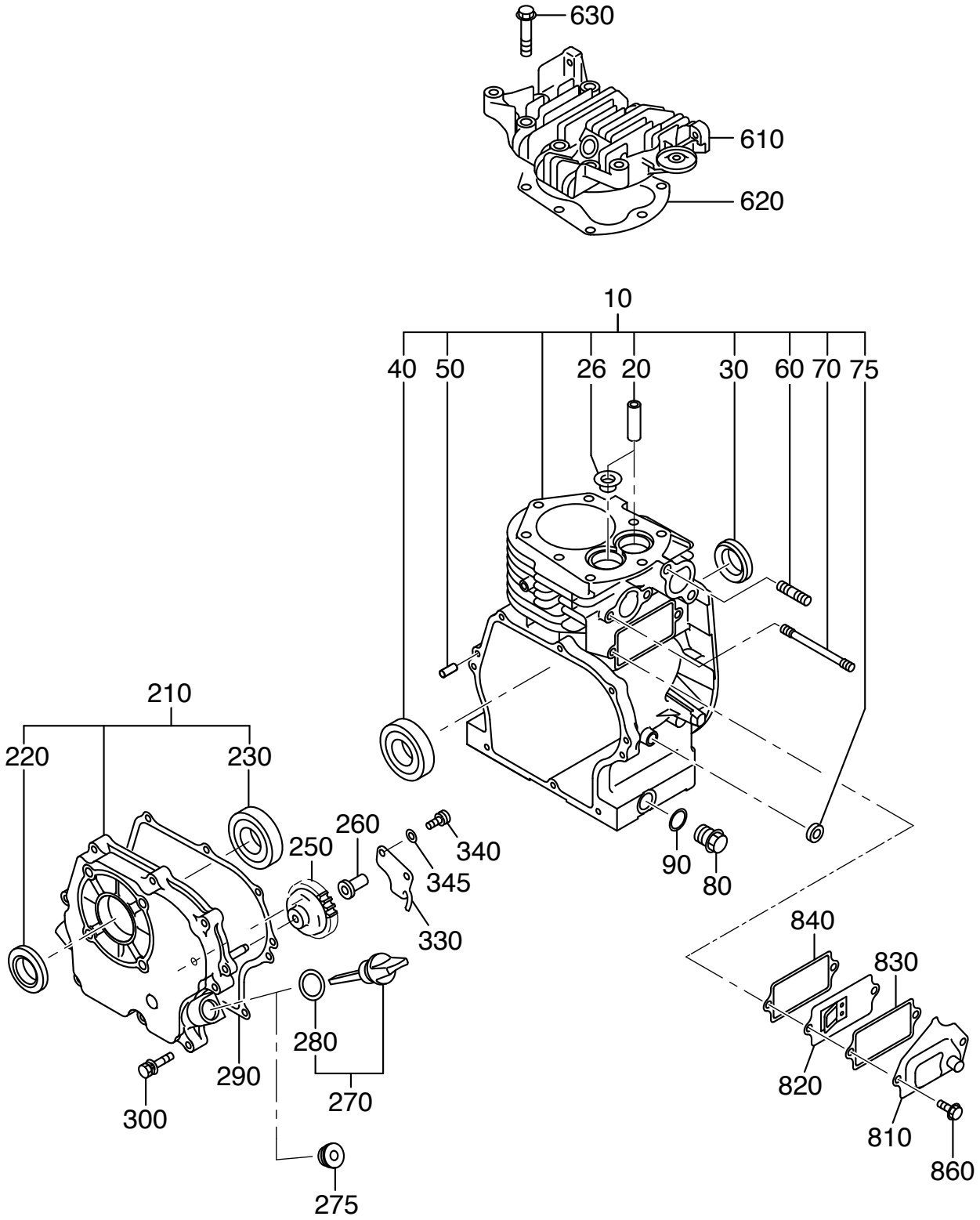

960—GASKET SET

1 CRANK CASE

REF.	PART NUMBER	PART NAME	QTY	R E M A R K S	CODE NO.	INTERCHANGE P/NO.	UNIT P	FIG.
10	281-10111-01	CRANK CASE CP	1	W/STEM SEAL	-			100
20	227-14202-03	VALEVE GUIDE	2	6.5DX11DX35L	-			100
26	282-16301-03	STEM SEAL	1	5.7DX14DX24DX10.2T	-			100
30	044-02501-50	OIL SEAL	1	25DX38DX7B	-			100
40	060-02501-80	BALL BEARING	1		-			100
50	031-00600-50	DOWEL PIN	2		-			100
60	010-50802-50	STUD	2	M8X1.25X25L	-			100
70	010-50601-20	STUD	2	M6X1.0X82L	-			100
75	044-00800-10	OIL SEAL	1	8DX14DX4B	-			100
80	040-11400-30	PLUG	2	M14X1.5X20DX12L	-			100
90	021-11400-20	GASKET	2	14.1DX19DX2.3T	-			100
210	282-11001-01	MAIN BEARING COVER C	1	STD	-			100
220	044-02501-60	OIL SEAL	1	25DX41DX7B	-			100
230	060-02501-10	BALL BEARING 6305Z	1		-			100
250	227-45003-01	GOVERNOR GEAR CP	1	52DX26T N=25	-			100
260	205-41901-03	GOVERNOR SLEEVE	1	6DX9DX16DX26L	-			100
270	282-63601-H1	OIL GAUGE CP	2	M18X1.5,L=59+23	-			100
280	X21-31600-30	GASKET	2	16DX23DX1.2T RUBBER	-			100
290	227-16001-03	GASKET (BEARING COV)	1	T=0.3	-			100
300	013-00600-40	BOLT AND WASHER AY	8	M6X1.0X30L W/SW	-			100
610	226-13001-13	CYLINDER HEAD	1		-			100
620	281-15001-01	GASKET CP (HEAD)	1	T=1.5	-			100
630	011-00800-10	FLANGE BOLT	8	M8X1.25X17DX40L	-			100
810	227-14301-01	TAPPET COVER CP	1		-			100
820	227-14401-01	BREATHER PLATE CP	1		-			100
830	282-16006-03	GASKET(TAPPET COVER)	1	T=0.8	-			100
840	282-16007-23	GASKET(BREATHER PLA)	1	T=1.5	-			100
860	011-00900-20	FLANGE BOLT	2		-			100
960	281-99001-17	GASKET SET	1		-			100

FIG. 200

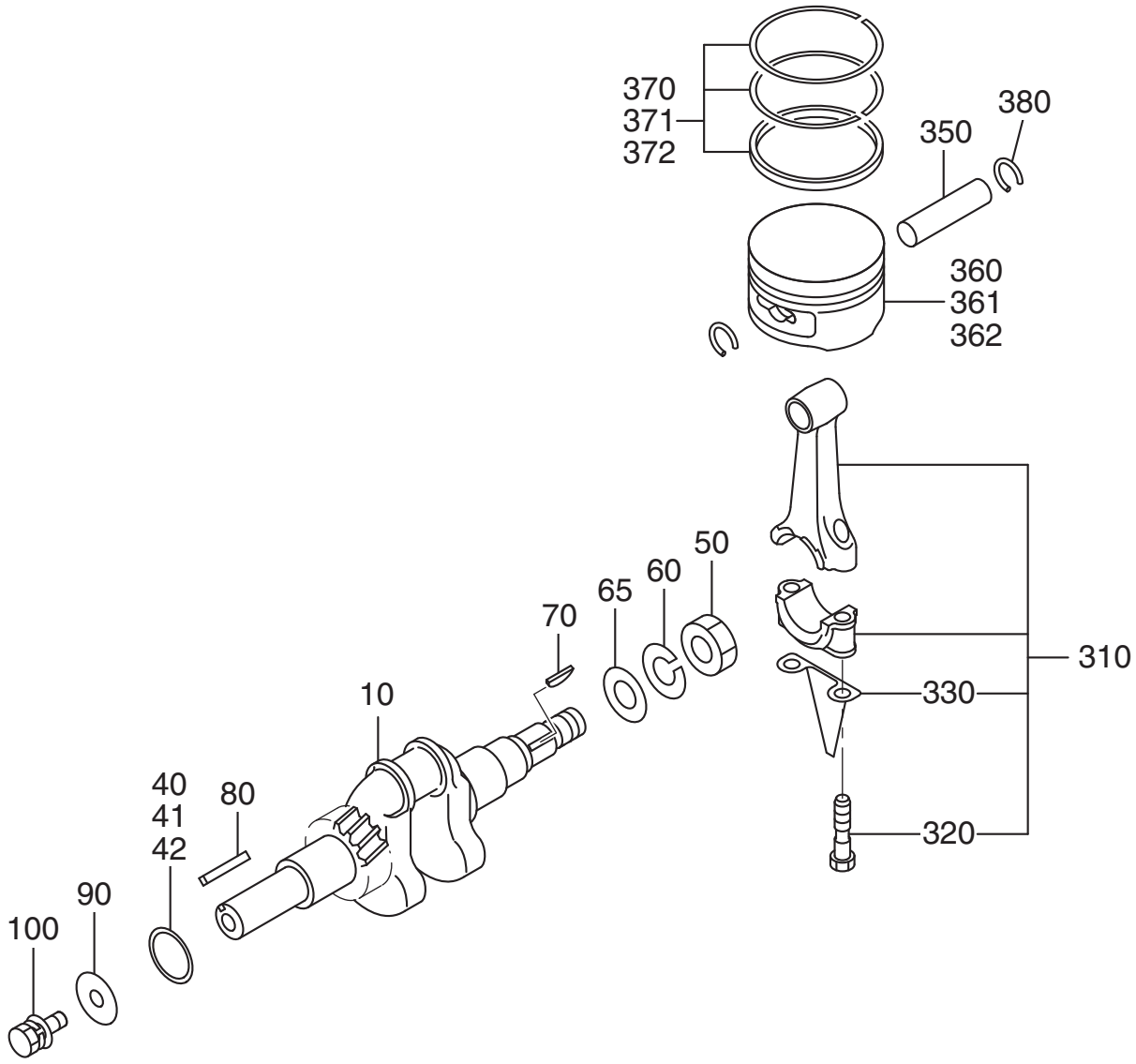
370
371
372
380
350
360
361
362
50
60
65
70
310
330
10
40
41
42
80
320
90
100

2 CRANKSHAFT,PISTON

REF.	PART NUMBER	PART NAME	QTY	R E M A R K S	CODE NO.	INTERCHANGE P/NO.	UNIT P	FIG.
10	281-20201-01	CRANKSHAFT CP	1	L=250 18DX48LXM8	-			200
40	023-02501-10	SPACER	1	25.3DX32DX0.6T	-			200
41	023-02501-20	SPACER	1	25.3DX32DX0.8T	-			200
42	023-02501-30	SPACER	1	25.3DX32DX1.0T	-			200
50	018-01400-20	FLANGE NUT	1	M14X1.5X28DX12H	-			200
60	020-01500-50	WASHER	1	15DX30DX3.2T	-			200
70	032-30300-10	WOODRUFF KEY	1	3BX6HX16D	-			200
80	005-30052-01	KEY	1		-			200
90	020-00800-50	WASHER	1	8.5DX28DX2.3T	-			200
100	001-10061-20	BOLT AND WASHER AY	1	M6X1.0X12L W/SW	-			200
310	226-22501-10	CONNECTING ROD AY	1	83CDX23B 24D-14D	-			200
320	226-23001-13	CONNECTING ROD BOLT	2	M6X1.0X13.5DX35L	-			200
330	226-23101-03	OIL SCRAPER	1		-			200
350	282-23301-03	PISTON PIN	1	14DX9DX52L	-			200
360	281-23411-H3	PISTON	1	STD (63DX52H)	-			200
370	226-23511-17	PISTON RING SET	1	STD (63D)	-			200
380	056-51400-10	CLIP	2	15.3DX1.2D	-			200

FIG. 300

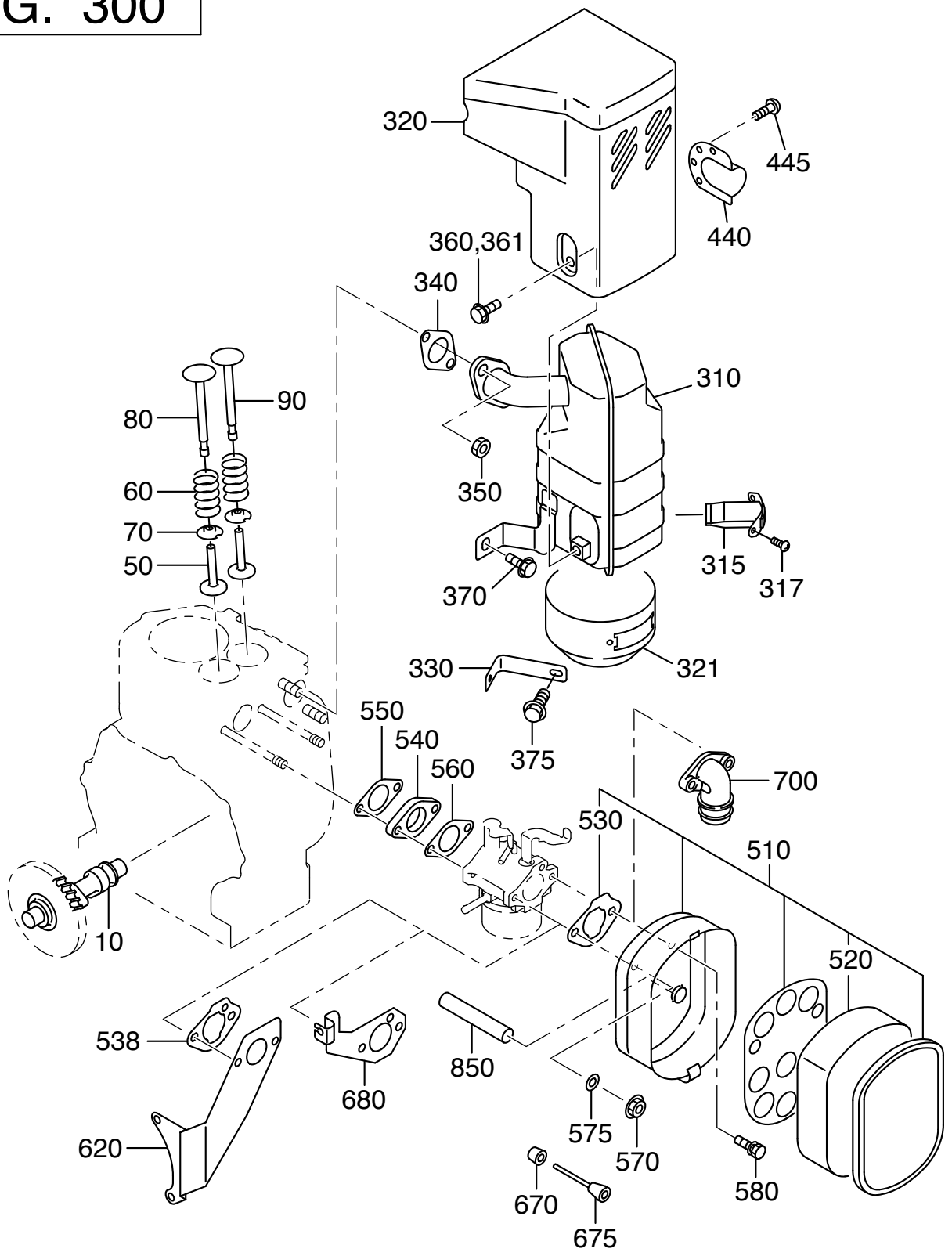
320
445
440
360,361
340
310
90
80
350
60
70
50
315
317
370
321
330
375
550
540
560
700
530
510
10
520
538
850
680
575
570
620
580
670
675

3 INTAKE EXHAUST

REF.	PART NUMBER	PART NAME	QTY	R E M A R K S	CODE NO.	INTERCHANGE P/NO.	UNIT P	FIG.
10	226-31701-13	CAMSHAFT	1	L=113 89DX8B N=44	-			300
50	226-33301-03	TAPPET	2	21DX7DX35.6L	-			300
60	227-33601-03	VALVE SPRING	2	20DX2.3DX37L N=8	-			300
70	227-33701-03	SPRING RETAINER	2	4.4WX22.7DX5.3T	-			300
80	281-33401-03	INTAKE VALVE	1	27DX6.5DX82.3L	-			300
90	281-33501-03	EXHAUST VALVE	1	23DX6.5DX82.4L	-			300
310	281-30101-N1	MUFFLER CP	1		-			300
320	281-34201-J1	MUFFLER COVER CP	1		-			300
340	281-35201-01	GASKET CP(EXHAUST)	1	T=1.5 24D 8.5DX44P	-			300
350	017-00800-30	NUT	2	M8X1.25X6.5H	-			300
360	011-00600-10	FLANGE BOLT	3	M6X1.0X14DX8L	-			300
370	011-00600-20	FLANGE BOLT	1	M6X1.0X14DX12L	-			300
540	227-32901-13	INSULATOR	1	T=7 22D 6.5DX42P	-			300
550	282-35901-03	GASKET(INSULATOR)	1	T=0.5 25D 6.5DX42P	-			300
560	227-35904-03	GASKET 2 (INSULATOR)	1	T=0.3 22.5D 6.5DX42P	-			300
570	226-39212-00	NUT AND WASHER AY	2	M6X1.0X14DX6H W/SW	-			300
580	001-10061-20	BOLT AND WASHER AY	1	M6X1.0X12L W/SW	-			300
850	085-10802-10	RUBBER PIPE	1	8DX11DX64L	-	085-10800-00		300

FIG. 310

CYCLONE

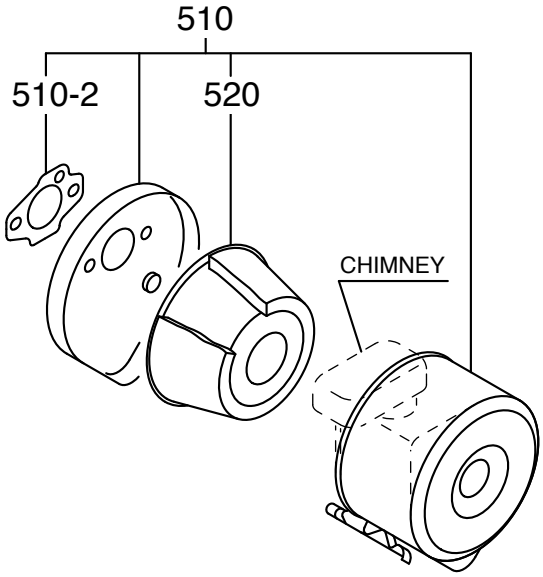

3 INTAKE EXHAUST

REF.	PART NUMBER	PART NAME	QTY	R E M A R K S	CODE NO.	INTERCHANGE P/NO.	UNIT P	FIG.
510	227-32650-H0	AIR CLEANER AY	1	ASSY ONLY	-			310

FIG. 400

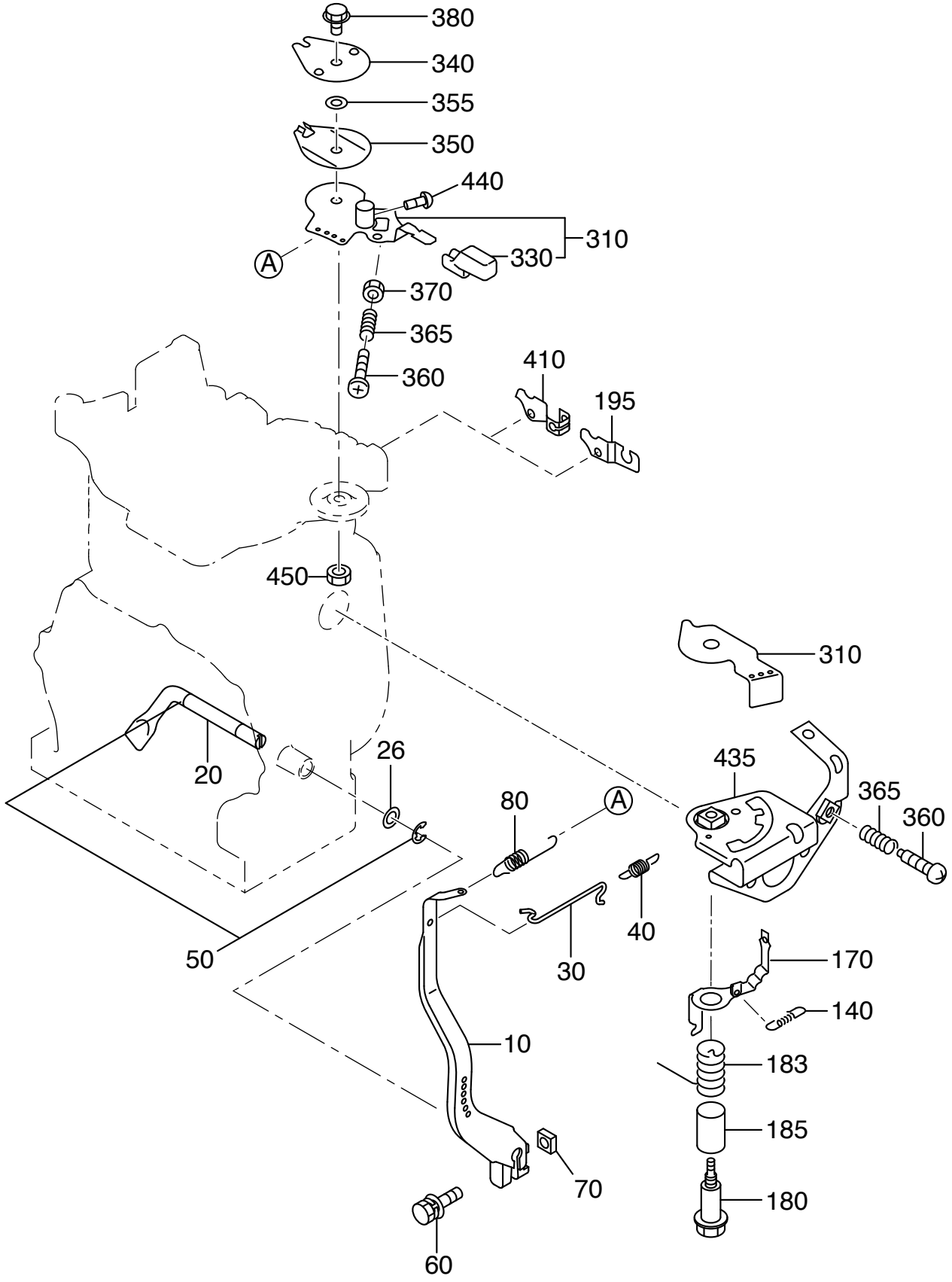
380
340
355
350
440
310
330
A
370
365
360
410
195
450
310
20
26
435
365
360
80
A
40
50
30
170
140
10
183
185
70
180
60

4 GOVERNOR,OPERATION

REF.	PART NUMBER	PART NAME	QTY	R E M A R K S	CODE NO.	INTERCHANGE P/NO.	UNIT P	FIG.
10	281-42302-H1	GOVERNOR LEVER CP	1		-			400
20	227-42201-03	GOVERNOR SHAFT	1		-			400
26	003-11080-00	WASHER	1	8.5DX18DX1.6T	-			400
30	227-42701-03	GOVERNOR ROD	1		-			400
40	227-42801-03	ROD SPRING	1	6DX0.5DX28L N=16	-			400
50	003-13060-00	CLIP	2	6DX12DX0.8T	-			400
60	001-14062-50	BOLT AND WASHER AY	1	M6X1.0X25L W/W,SW	-			400
70	018-60600-20	NUT	1	M6X1.0X4.9H SQUARE	-			400
80	226-42501-13	GOVERNOR SPRING	1	6.9DX0.7DX45L N=14	-			400
310	227-43302-20	SPEED CONTROL AY	1	W/SWIVEL	-			400
330	227-43601-03	KNOB	1		-			400
340	227-43501-13	STOP PLATE	1		-			400
350	227-45002-03	SPRING WASHER	1		-			400
360	004-31063-00	SCREW	1	M6X1.0X30L	-			400
370	002-27060-00	NUT	1	M6X1.0X3.6H	-			400
380	011-00600-50	FLANGE BOLT	1	M6X1.0X13DX20L	-			400
410	227-44201-13	WIRE BRACKET	1		-			400
440	004-31040-80	SCREW	1	M4X0.7X8L	-			400
450	002-27060-00	NUT	1	M6X1.0X3.6H	-			400

FIG. 500

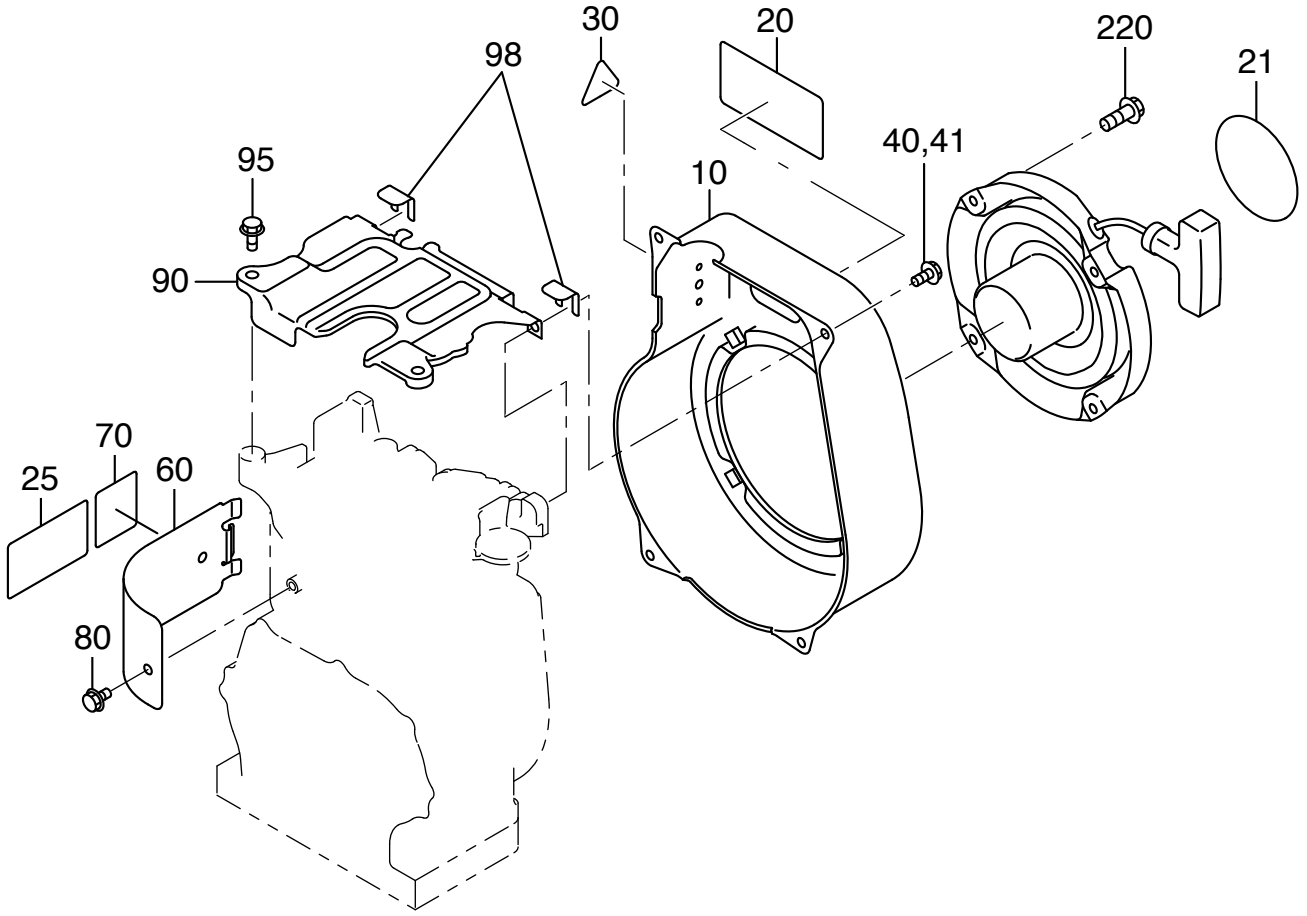

5 COOLING,STARTING

REF.	PART NUMBER	PART NAME	QTY	R E M A R K S	CODE NO.	INTERCHANGE P/NO.	UNIT P	FIG.
10	281-51260-11	BLOWER HOUSING CP	1	ROBIN YELLOW	-			500
20	281-95101-13	LABEL(MODEL)	1	50X95	-			500
21	073-20051-70	LABEL(TRADE MARK)	1		-			500
40	011-00600-20	FLANGE BOLT	3	M6X1.0X14DX12L	-			500
41	001-11062-00	BOLT AND WASHER AY	1		-			500
60	226-52601-03	CYLINDER BAFFLE	1		-			500
70	281-91870-03	LABEL (ENGINE NAME)	1	38X34 ENGLISH	-			500
80	011-00600-10	FLANGE BOLT	1	M6X1.0X14DX8L	-			500
90	226-52701-03	HEAD COVER	1		-			500
220	011-00600-10	FLANGE BOLT	4	M6X1.0X14DX8L	-			500

FIG. 520

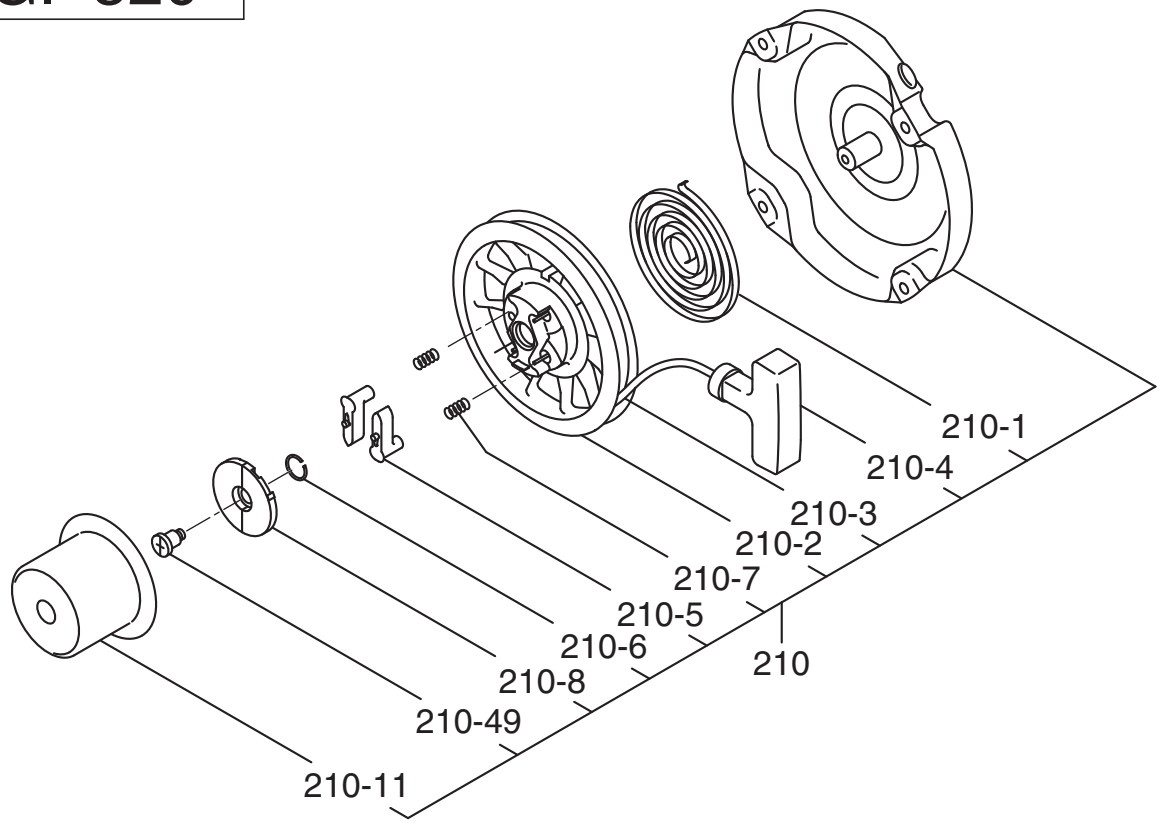
210-1
210-4
210-3
210-2
210-7
210-5
210-6
210
210-8
210-49
210-11

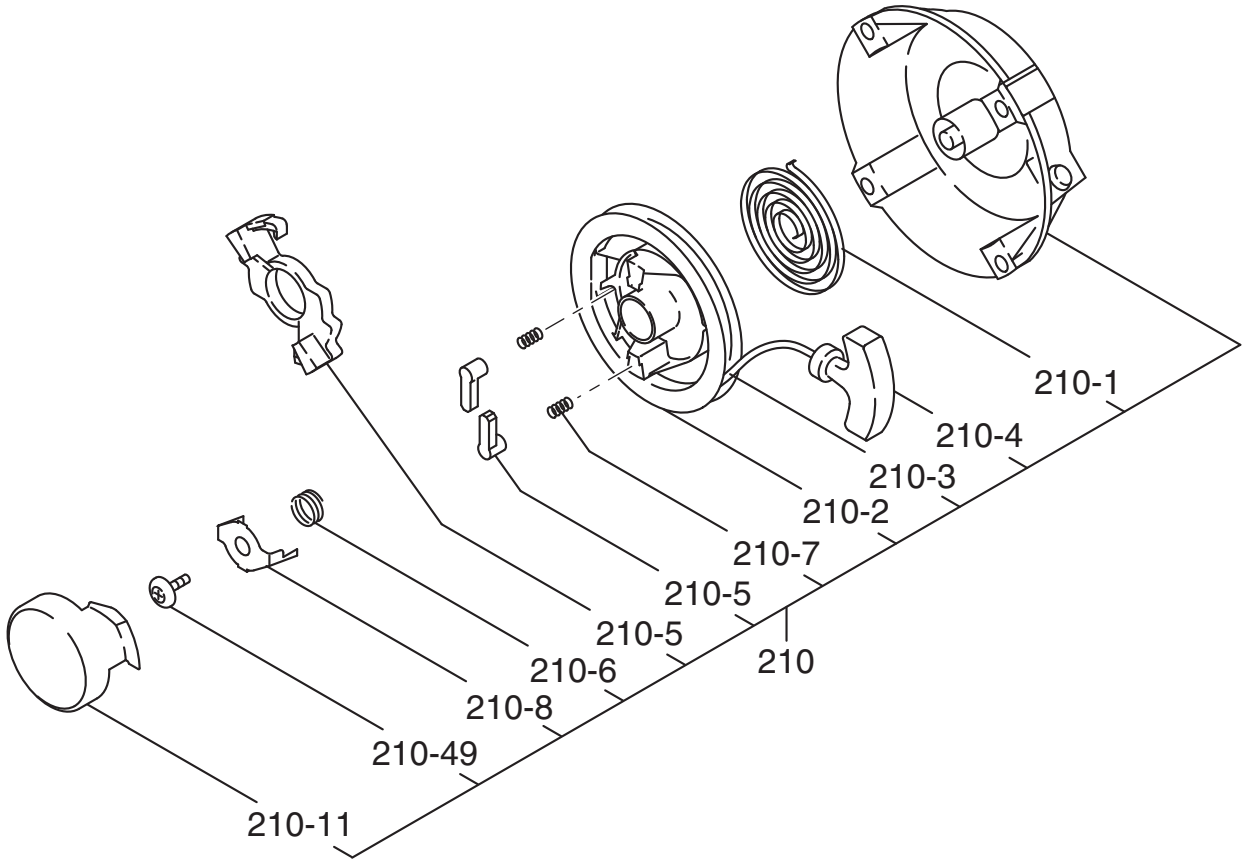
210-1
210-4
210-3
210-2
210-7
210-5
210-5
210-6
210
210-8
210-49
210-11

5 COOLING STARTHIG

REF.	PART NUMBER	PART NAME	QTY	R E M A R K S	CODE NO.	INTERCHANGE P/NO.	UNIT P	FIG.
210	226-50711-50	RECOIL STARTER AY	1		-			520
- 1	226-50716-08	SPIRAL SPRING	1		-			520
- 2	226-50721-08	REEL	1		-			520
- 3	226-50710-18	STARTER ROPE	1		-			520
- 4	226-50701-18	STARTER KNOB	1		-			520
- 5	226-50726-08	RACHET	2		-			520
- 6	226-50731-08	FRICTION SPRING	1		-			520
- 7	226-50752-08	RATCHET SPRING	2		-			520
- 8	226-50741-08	FRICTION PLATE	1		-			520
- 11	226-50745-18	STARTER PULLEY	1		-			520
- 49	226-50753-18	CENTER SCREW	1		-			520

FIG. 600

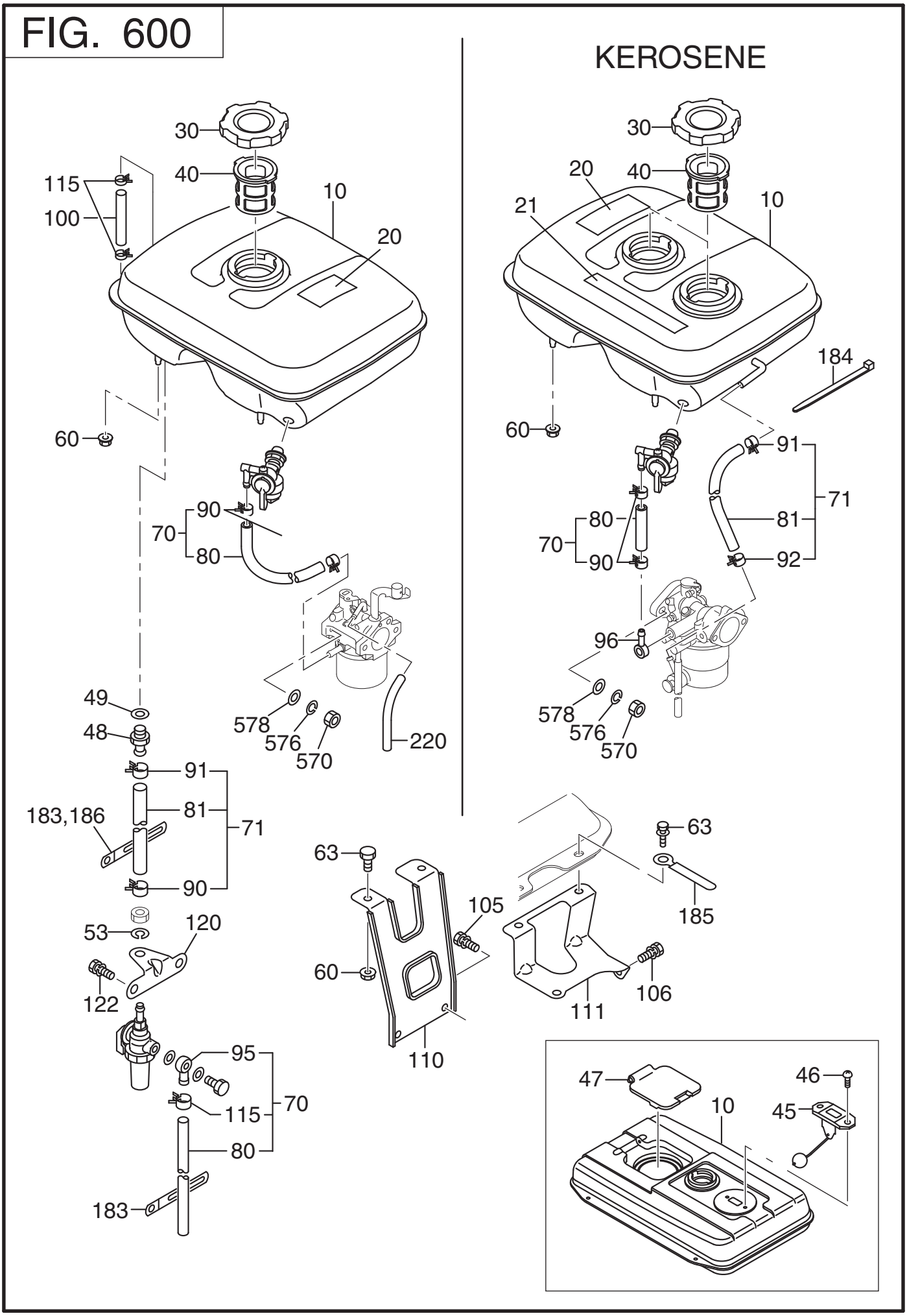
KEROSENE
30
40
10
20
115
100
60
90
70
80
49
48
91
81
71
183,186
90
53
120
122
95
115
70
80
183
578
576
570
220
63
105
60
110
111
106
185
21
184
91
71
81
92
96
578
576
570
47
46
10
45

6 FUEL LUBRICANT

REF.	PART NUMBER	PART NAME	QTY	R E M A R K S	CODE NO.	INTERCHANGE P/NO.	UNIT P	FIG.
10	281-60101-11	FUEL TANK CP	1	2.8L ROBIN YELLOW	-			600
20	073-20044-50	LABEL(CAUTION)	1	38X70 ILLUST	-			600
30	043-04300-15	FUEL TANK CAP CP	1	42.5DX68DX14H	-			600
40	X64-13600-10	FUEL FILTER	1		-			600
60	002-38060-00	FLANGE NUT	2	M6X1.0X13DX6H	-			600
70	281-62601-H1	FUEL PIPE CP	1	6DX12D(FOMED)	-			600
90	056-11100-20	HOSE CLAMP	2	11.5DX8BX0.7T	-			600
220	226-66002-13	PIPE (AIR VENT)	1	4DX8D(FORMED)	-			600

FIG. 630

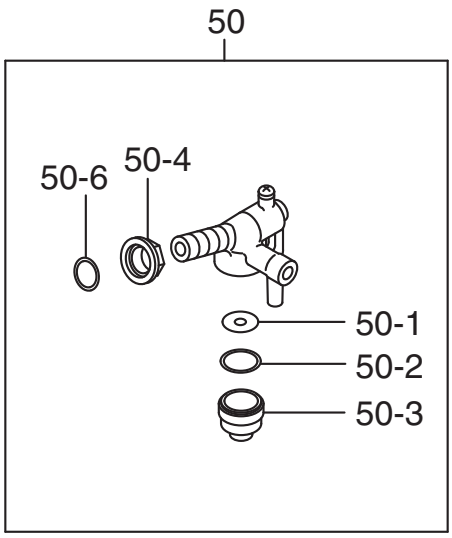
50
50-6
50-4
50-1
50-2
50-3

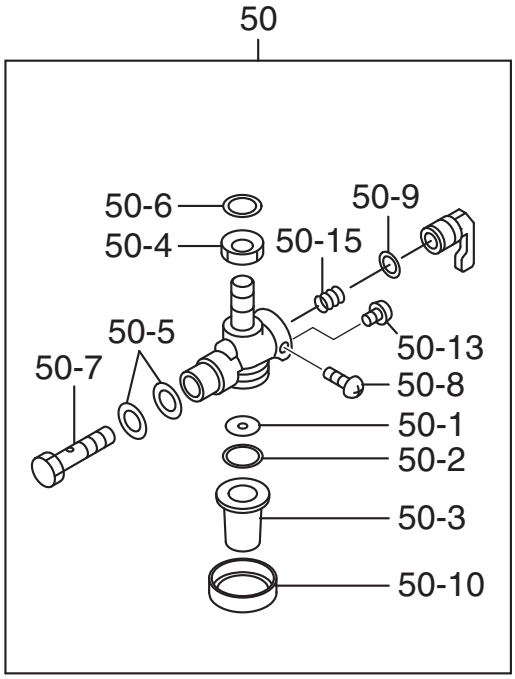
50
50-6
50-4
50-9
50-15
50-5
50-13
50-7
50-8
50-1
50-2
50-3
50-10

6 FUEL LUBRICANT

REF.	PART NUMBER	PART NAME	QTY	R E M A R K S	CODE NO.	INTERCHANGE P/NO.	UNIT P	FIG.
50	064-20064-00	FUEL STRAINER AY	1		-			630
- 1	064-20064-20	FILTER	1		-			630
- 2	064-20064-10	PACKING	1		-			630
- 3	064-20042-10	CUP	1		-			630
- 4	064-20064-30	NUT	1		-			630
- 6	064-20064-40	PACKING	1		-			630

FIG. 640

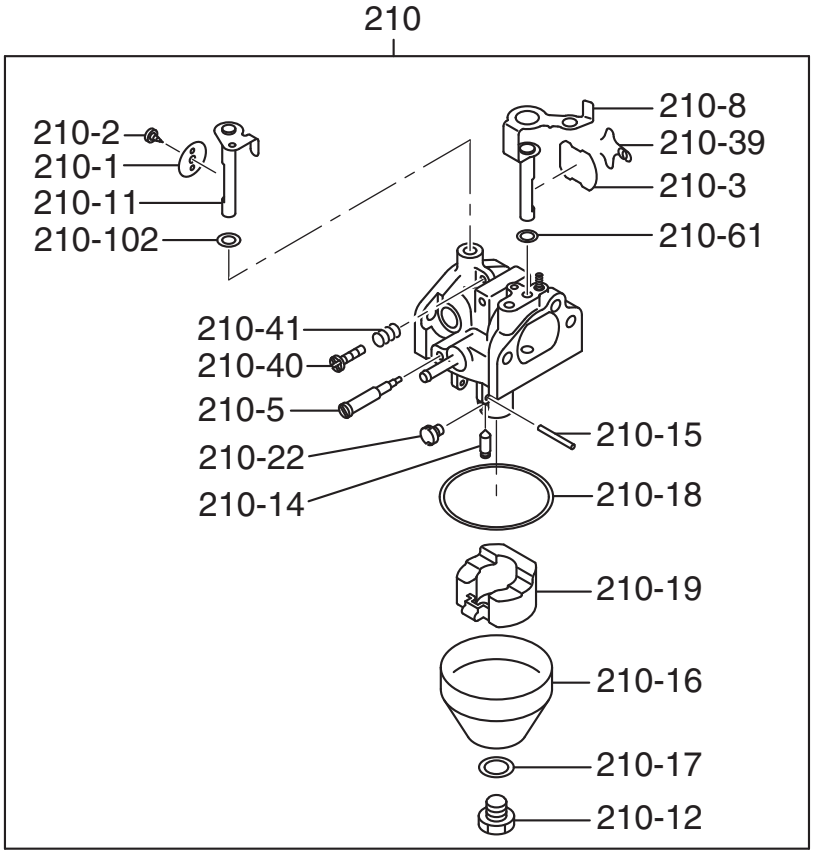
210
210-2
210-1
210-11
210-102
210-8
210-39
210-3
210-61
210-41
210-40
210-5
210-22
210-14
210-15
210-18
210-19
210-16
210-17
210-12

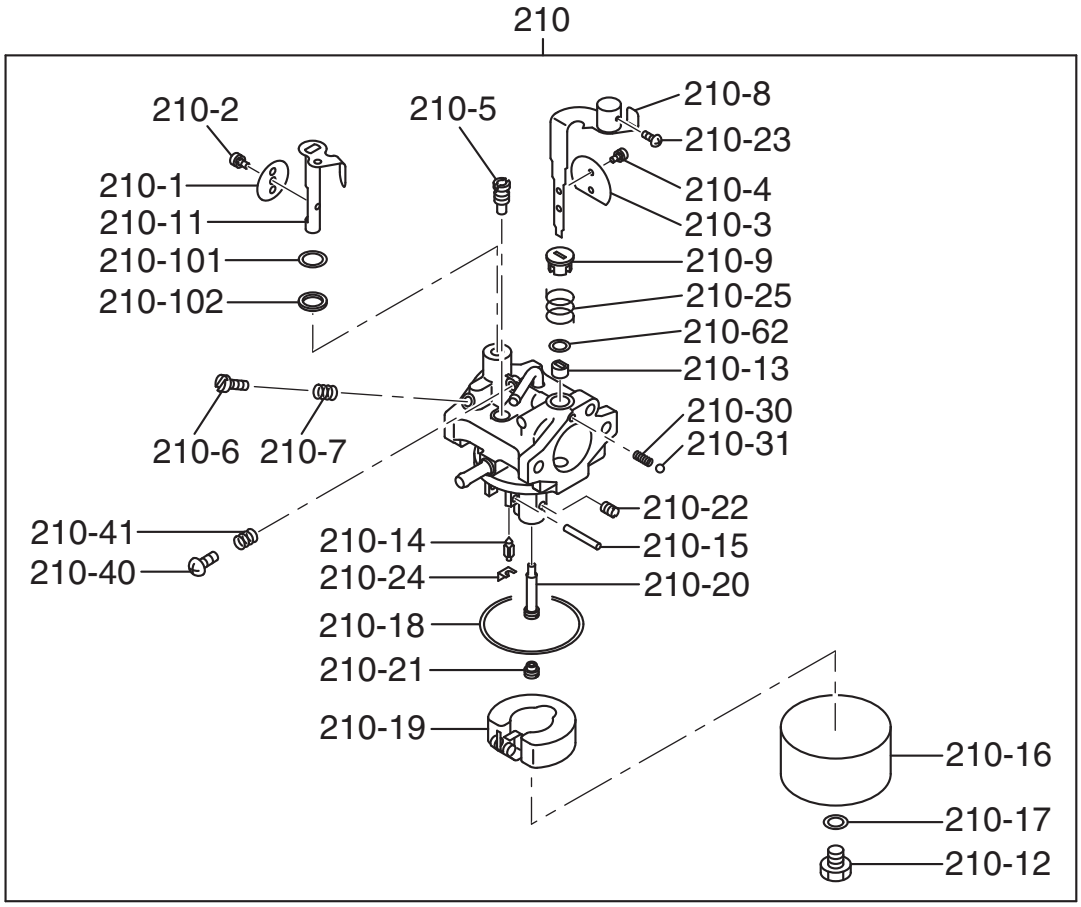
210
210-2
210-5
210-8
210-23
210-1
210-4
210-11
210-3
210-101
210-9
210-102
210-25
210-62
210-13
210-30
210-6
210-7
210-31
210-22
210-41
210-14
210-15
210-40
210-24
210-20
210-18
210-21
210-19
210-16
210-17
210-12

6 FUEL LUBRICANT

REF.	PART NUMBER	PART NAME	QTY	R E M A R K S	CODE NO.	INTERCHANGE P/NO.	UNIT P	FIG.
210	281-62401-H0	CARBURETOR AY	1	ASSY ONLY	-			640

FIG. 700

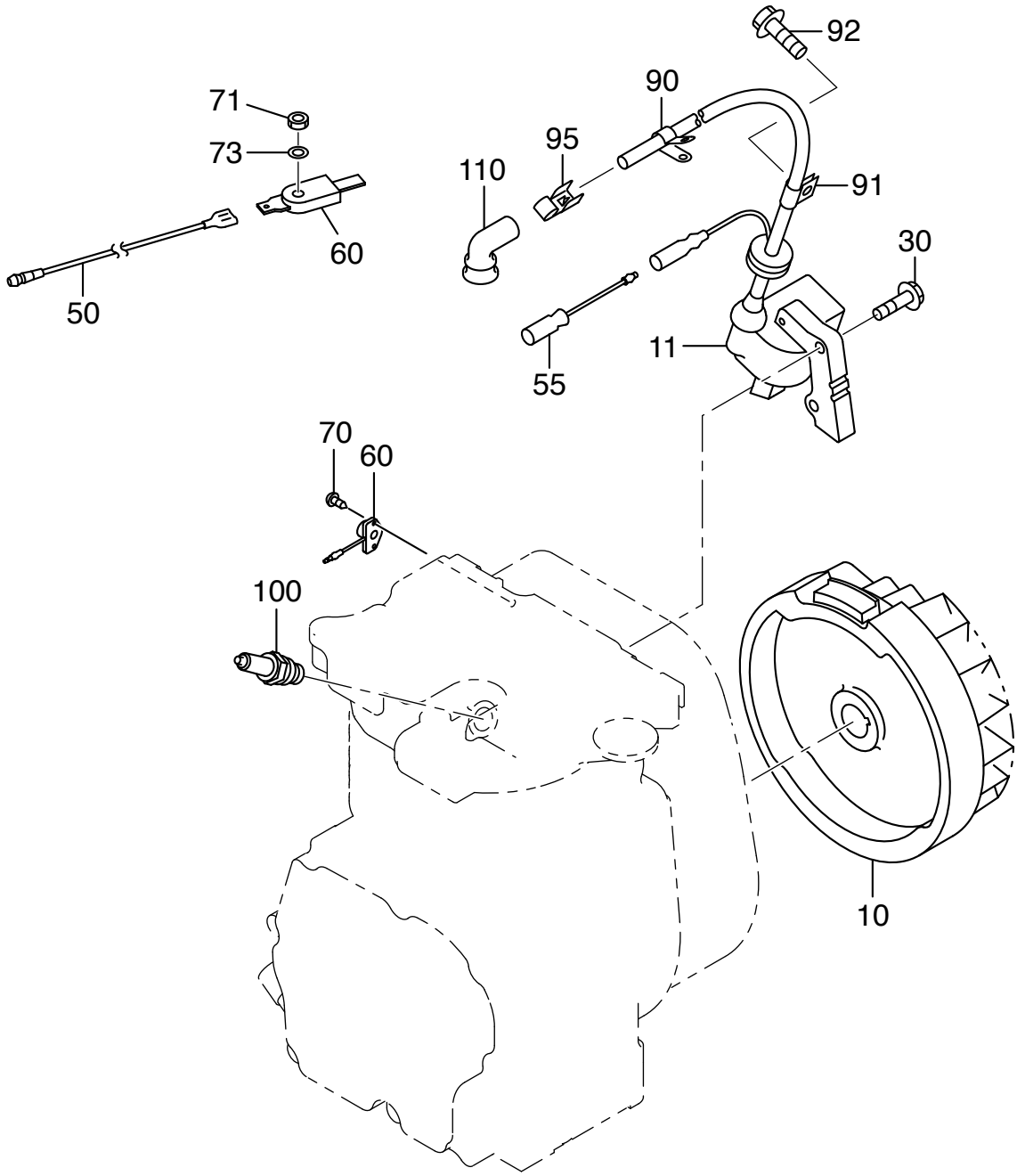

7 ELECTRIC DEVICE

REF.	PART NUMBER	PART NAME	QTY	R E M A R K S	CODE NO.	INTERCHANGE P/NO.	UNIT P	FIG.
10	281-79201-11	FLYWHEEL CP	1	MARK AP05	-			700
11	281-79401-11	IGNITION COIL CP	1		-			700
30	011-00601-21	FLANGE BOLT	2	M6X1.0X30L	-			700
60	066-00004-71	SWITCH AY	1		-			700
70	015-00400-90	TAPPING SCREW	2	M4X12L	-			700
100	065-01400-31	SPARK PLUG	1	NGK B6HS	-			700
110	065-50000-81	SPARK PLUG CAP	1		-			700

FIG. 900

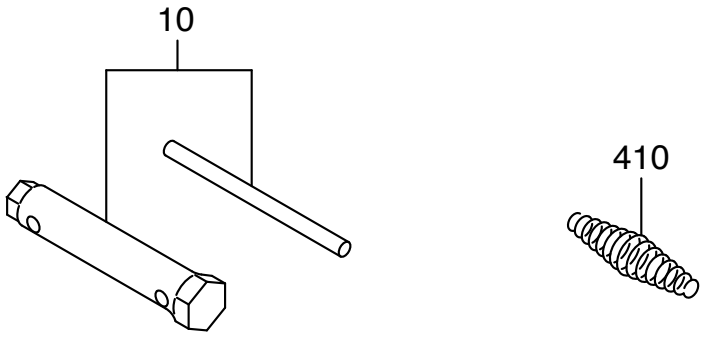

9 ACCESSORIES LABEL

REF.	PART NUMBER	PART NAME	QTY	R E M A R K S	CODE NO.	INTERCHANGE P/NO.	UNIT P	FIG.
10	227-90301-10	ACCESSORY TOOL KIT	1		-			900
410	226-45002-13	RETURN SPRING	1	12-6DX1.2DX56L N=12	-			900